Parts Manual

Mfg. No: 1015-0
1,250 PSI

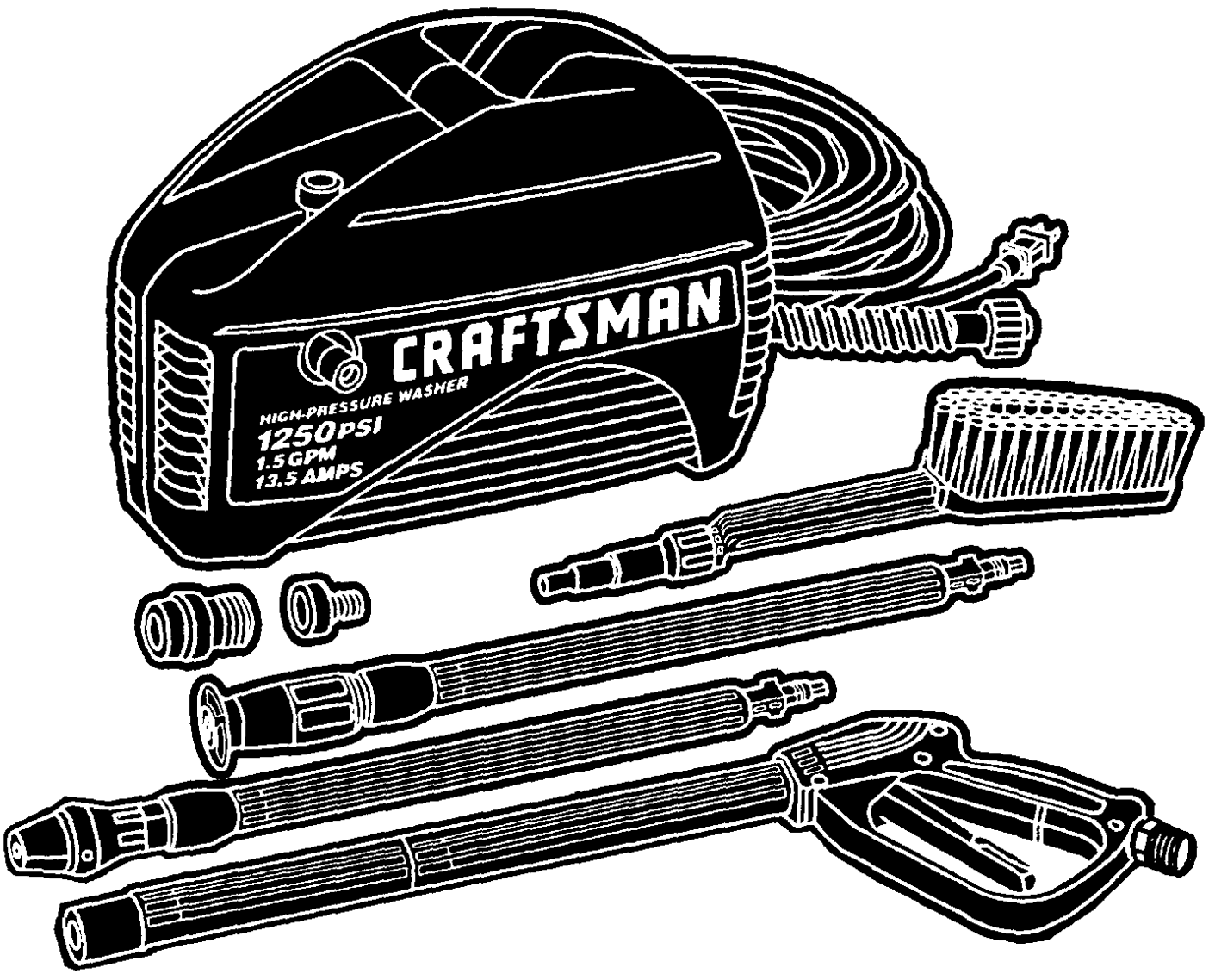

Copyright © Briggs & Stratton. All Rights reserved

Model Components

Page

Parts (Part 1). 4
Parts (Part 2). 8
Torque Specification Chart. 10

Not For Reproduction

Copyright © Briggs & Stratton. All Rights reserved

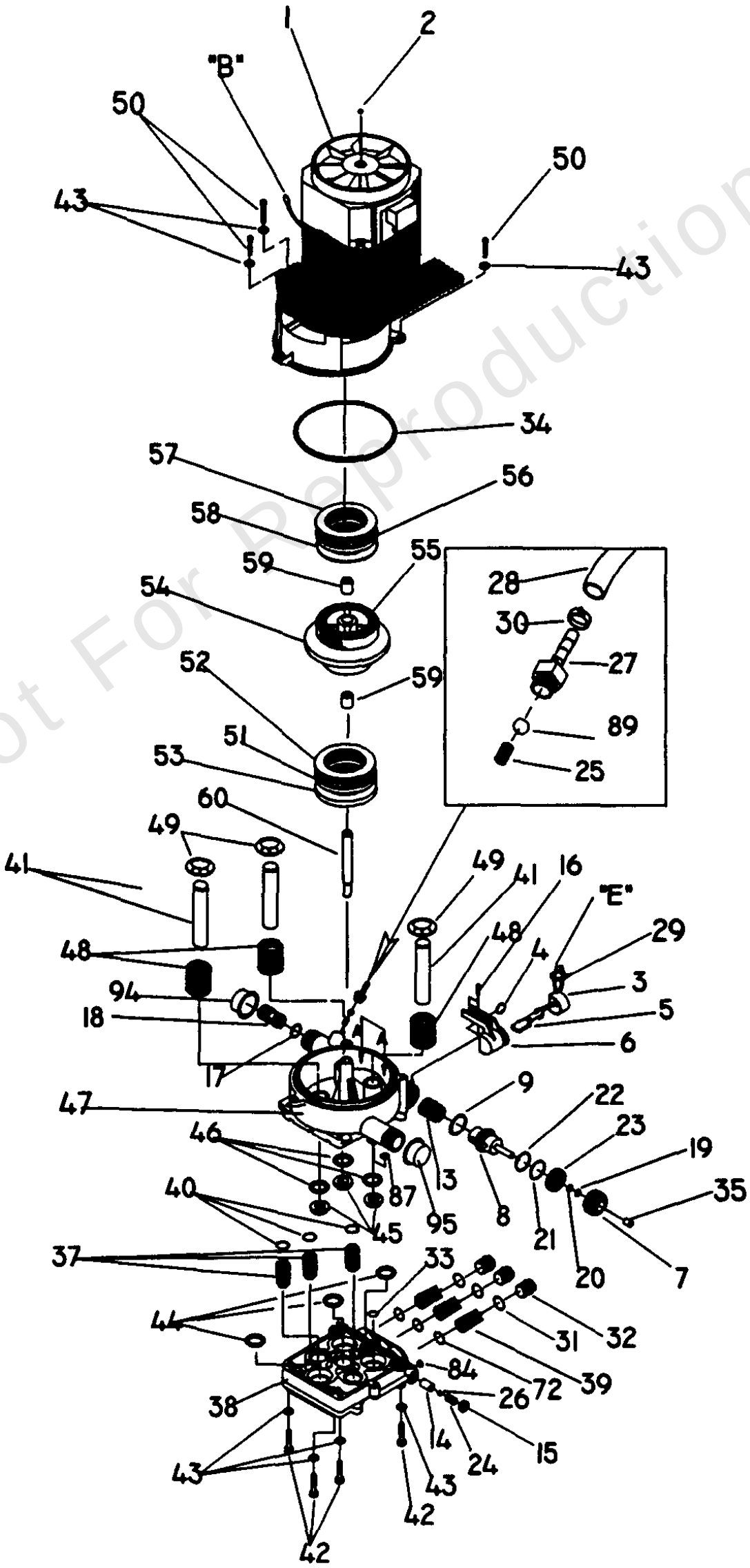

Not For Reproduction

Parts (Part 1)

REF NO	PART NO	QTY	DESCRIPTION
1	21144	1	Assy., Motor Complete
2	B1125	1	Nut, M5 - .8 LH Thread
3	21054	1	Boot, Rubber
4	21055	1	Grommet, Rubber
5	20138	1	Switch, Auto
6	20928	1	Housing, Auto-Switch
7	20218	1	Cap, Retainer
8	20213	1	Piston
9	21525	1	Wiper, Piston Bore
10	B1257	1	Decal, Circuit CSA
11	B1238	1	Decal, Unit
12	B1277	1	Decal, Instructions CSA
13	20212	1	Spring, 15.08 x Dia. 1.62 CS x 22.3
14	A1132	1	Seat, Ball
15	A1131	1	Plug, Expansion
16	A1495	2	Taptite M4-0.7 x 10mm SW MTG
17	B1077	1	"O" Ring, Venturi
18	B1060	1	Venturi, Chem. Injector
19	21124	1	Ring, Backup dia. 4.34 Id x 1.24
20	21123	1	"O" Ring dia. 3.68 Id x 1.78 CS [.070"]
21	21126	1	Ring, Backup dia. 26.0 ID
22	21125	1	"O" Ring dia. 25.07 ID x 2.62 CS [.103"]
23	20217	1	Stop, Piston Return
24	A1130	1	Spring, Pop-off Valve
25	95380	1	Spring, Chem. Injector
26	97852	1	Ball, dia. 3/16" Pop-off Valve
27	A1575	1	Barb, Hose, Brass with nylon Insert
28	A1040A	1	Hose, Chem
29	28739A	1	Tie Wrap
30	48031G	1	Hose Clamp, 3/16"
31	97840	3	"O" Ring, Hi-press dia. 15.6 x 1.78mm
32	97841	3	Cap, Check Valve
33	97837	1	"O" Ring, Hi-press dia. 9.2 x 2.62mm
34	97835	2	"O" Ring, Hsg Seal, dia. 82.2 x 2.62mm
35	B1026	1	Vinyl Cap
36	98893	1	Decal, 800 #
37	97838	3	Assy., Check Valve, Inlet
38	A1111A	1	Head Pump
39	97839	3	Assy., Check Valve, Outlet
40	97851	3	"O" Ring, Piston dia. 10.82 x 1.78mm
41	97832	3	Piston. dia. 15 x 65mm
42	40946	4	Bolt, SHCS M6-1.0 x 35mm
43	93873	7	Lockwasher, M6 Ribbed
44	93667	3	Seal, Piston "U" Cup
45	97831	3	Spacer, Pilot
46	93680	3	Seal, Oil-piston dia. 15 TC4
47	20140V	1	Housing, Piston
48	99503	3	Spring, Piston Return
49	97830	3	Retainer, Piston Spring
50	97962	3	Bolt, SHCS M6-1.0 x 25mm
51	97824A	1	Bearing, Needle dia. 40 x 60mm

Not For Reproduction

Copyright © Briggs & Stratton. All Rights reserved

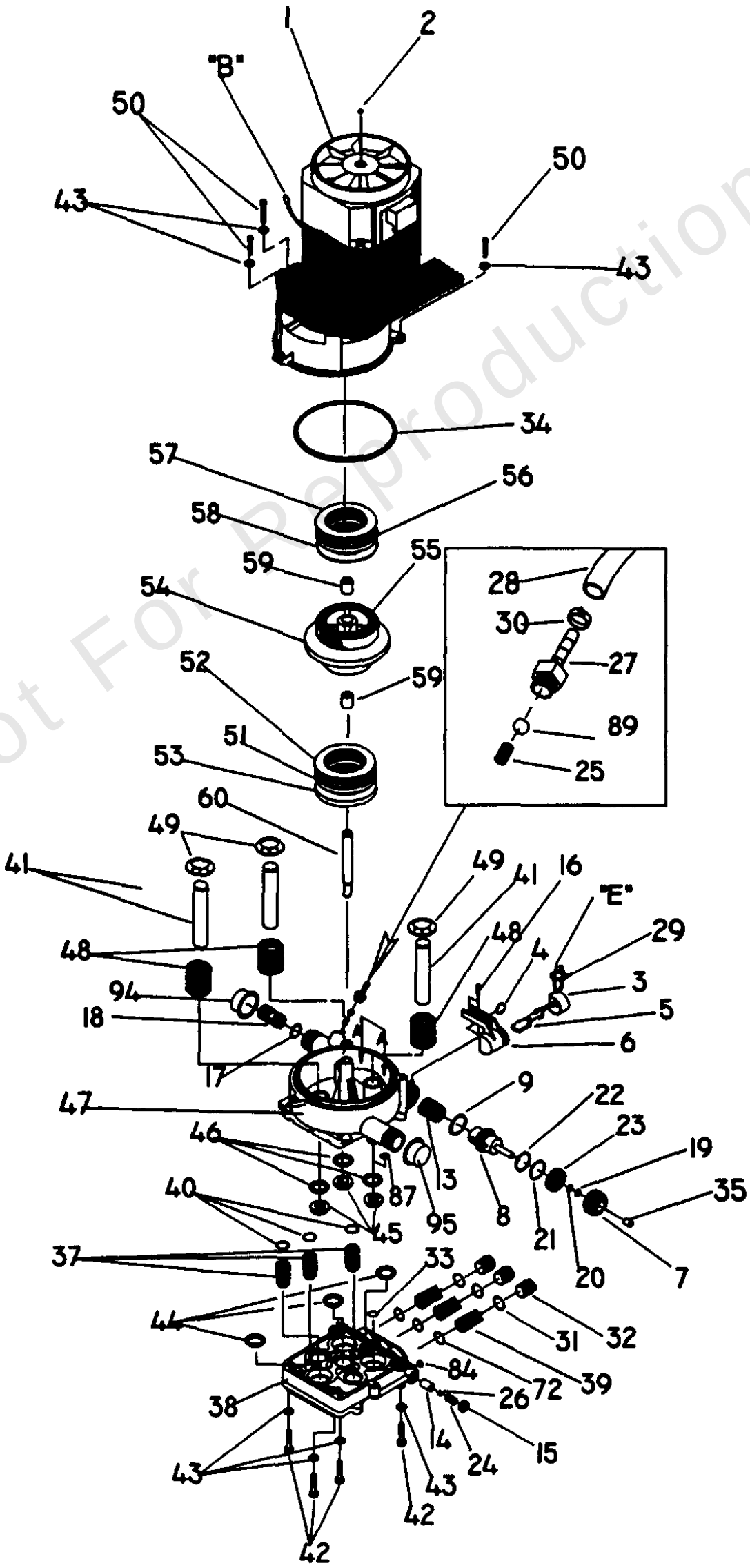

Not For Reproduction

Parts (Part 1)

REF NO	PART NO	QTY	DESCRIPTION
52	97826	1	Washer, Brg dia. 40 x 60 x 1mm
53	97825	1	Washer, Brg dia. 36 x 60 x 6mm
54	97716	1	Cam, Axial 4.3 MM Stroke
55	97829	1	Gear, Axial Cam
56	97822	1	Brg Needle Thrust dia. 35 x 52mm
57	20610	1	Washer, Brg dia. 35 x 55 x 3mm
58	97823	1	Washer, Brg dia. 35 x 52 x 1mm
59	97834	2	Bearing, Needle dia. 8 x 12 x 10mm
60	97833	1	Shaft, Idler Axial Cam
62	98806	1	Foam, Air In, Fan-end
63	97893	1	Housing, Switch and Cord
64	20984	1	Switch, Rocker
65	98801	4	Mount, Rubber
66	97892	1	Cover, Motor
67	20985	1	Enclosure, Rocker Switch, Boot
68	20986	1	Boot, Rocker Switch
69	84543B	2	Plastite 3.5mm x 12mm
70	98805	1	Cord, Power
71	84358	4	Plastite #6-19 x .75mm
72	97934	3	"O" Ring, Chk Valve dia. 12.4 x 1.78mm
73	99349	1	Relief, Strain Cord
74	B1053	1	ETL Decal
75	B1386	1	Data Decal
76	98904	1	Nozzle Hang Tag, French
77	79552	1	Overlaminate
80	97694A	1	Housing, Inlet
81	97695A	1	Housing, Outlet
82	21265	1	Quick Disconnect, Male
83	96016	1	Quick Disconnect, Female
84	76353A	1	Plug, Taper dia. 5.4
85	A1484	1	Lock Nut, Strain Relief
86	A1485	1	Seal Ring, Strain Relief
87	97855	1	"O" Ring dia. 6.5 x 2.01mm
88	A1041	1	Filter, Chem Hose
89	95379	1	Ball, Chemical Injector
90	99350	6	Screw #6 Plastite
91	21336	1	Spray Gun
92	B1242E	1	Assy., Wand & Adj. Nozzle
93	B1239	1	High Pressure Hose
94	97100	1	Cap, HP
95	B1124	1	Cap, Inlet
96	B1296	1	Assy., Wand & Turbo
97	88185	1	Brush, Utility
98	B1236E	1	Nozzle, 1.20 (yellow)
99	B1051	1	Bayonet Adaptor
100	B1285	1	Decal, CSA Instructions
	B1385	1	Owner's Manual -(Not Illustrated)

Not For Reproduction

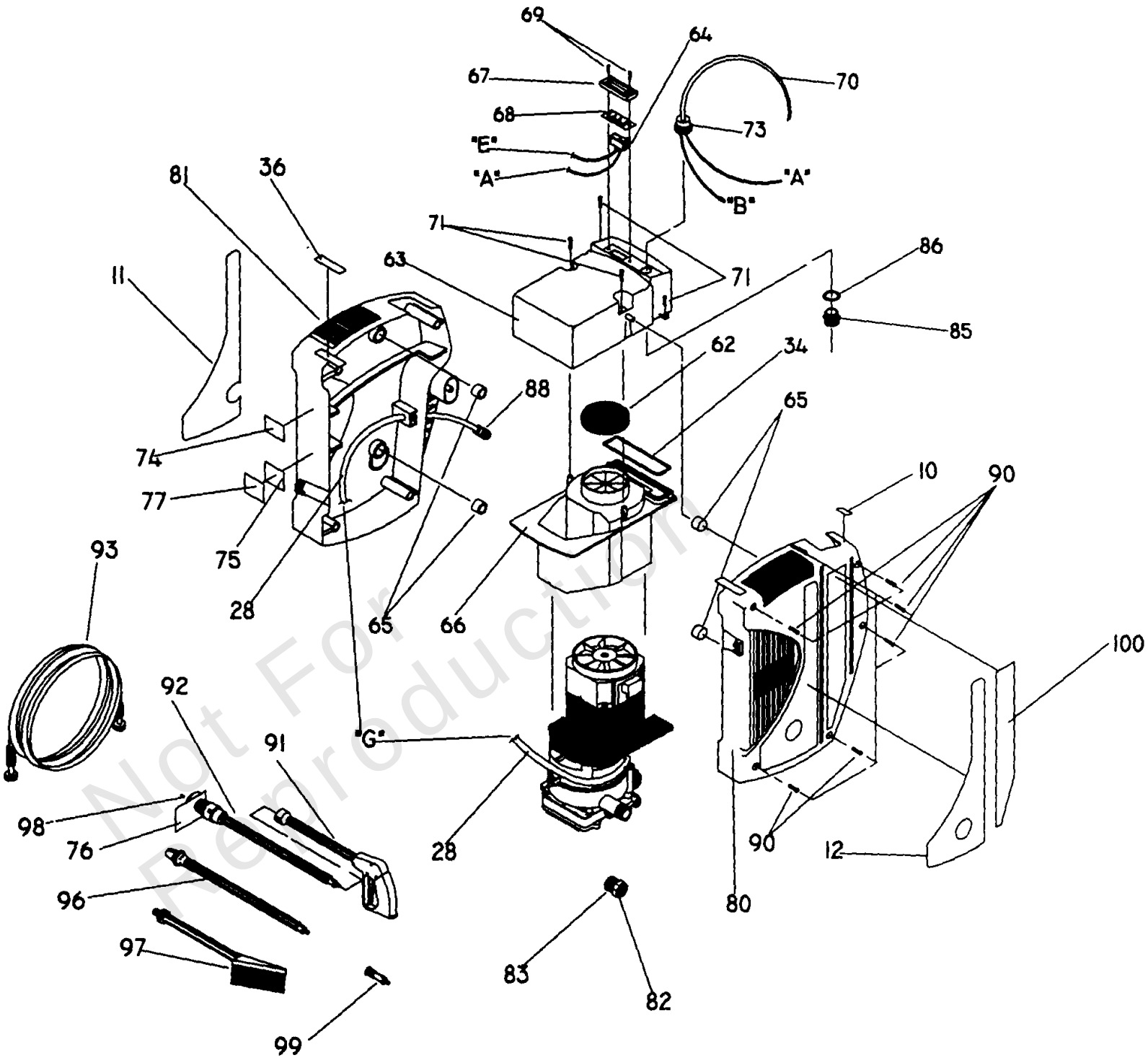

Not For Reproduction

Parts (Part 2)

REF NO	PART NO	QTY	DESCRIPTION
10	B1257	1	Decal, Circuit CSA
11	B1238	1	Decal, Unit
12	B1277	1	Decal, Instructions CSA
28	A1040A	1	Hose, Chem
34	97835	2	"O" Ring, Hsg Seal, dia. 82.2 x 2.62mm
36	98893	1	Decal, 800 #
62	98806	1	Foam, Air In, Fan-end
63	97893	1	Housing, Switch and Cord
64	20984	1	Switch, Rocker
65	98801	4	Mount, Rubber
66	97892	1	Cover, Motor
67	20985	1	Enclosure, Rocker Switch, Boot
68	20986	1	Boot, Rocker Switch
69	84543B	2	Plastite 3.5mm x 12mm
70	98805	1	Cord, Power
71	84358	4	Plastite #6-19 x .75mm
73	99349	1	Relief, Strain Cord
74	B1053	1	ETL Decal
75	B1386	1	Data Decal
76	98904	1	Nozzle Hang Tag, French
77	79552	1	Overlaminate
80	97694A	1	Housing, Inlet
81	97695A	1	Housing, Outlet
82	21265	1	Quick Disconnect, Male
83	96016	1	Quick Disconnect, Female
85	A1484	1	Lock Nut, Strain Relief
86	A1485	1	Seal Ring, Strain Relief
88	A1041	1	Filter, Chem Hose
90	99350	6	Screw #6 Plastite
91	21336	1	Spray Gun
92	B1242E	1	Assy., Wand & Adj. Nozzle
93	B1239	1	High Pressure Hose
96	B1296	1	Assy., Wand & Turbo
97	88185	1	Brush, Utility
98	B1236E	1	Nozzle, 1.20 (yellow)
99	B1051	1	Bayonet Adaptor
100	B1285	1	Decal, CSA Instructions
	B1385	1	Owner's Manual -(Not Illustrated)

Not For Reproduction

Hardware Identification & Torque Specifications

Torque Specification Chart

FOR STANDARD METRIC MACHINE HARDWARE (Tolerance ± 20%)

Property Class	5.6 Class 5.6		8.8 Class 8.8		10.9 Class 10.9		12.9 Class 12.9	
Size Of Hardware	*in/lbs* **ft/lbs**	Nm.	*in/lbs* **ft/lbs**	Nm.	*in/lbs* **ft/lbs**	Nm.	*in/lbs* **ft/lbs**	Nm.
M3	*5.88*	*.56*	*13.44*	*1.28*	*19.2*	*1.80*	*22.92*	2.15
M4	*13.44*	*1.28*	*30.72*	*2.90*	*43.44*	*4.10*	*52.56*	4.95
M5	*26.4*	*2.50*	*60.96*	*5.75*	**5.97**	*8.10*	**7.15**	9.7
M6	*44.64*	*4.3*	**7.3**	*9.9*	**10.3**	*14*	**12.1**	16.5
M7	**5.2**	*7.1*	**12.1**	*16.5*	**16.9**	*23*	**19.9**	27
M8	**7.7**	*10.5*	**17.7**	*24*	**25**	*34*	**29**	40
M10	**15**	*21*	**35**	*48*	**50**	*67*	**59**	81
M12	**26**	*36*	**61**	*83*	**86.2**	*117*	**103**	140
M14	**42**	*58*	**101**	*132*	**136**	*185*	**162**	220
M16	**64**	*88*	**147**	*200*	**210**	*285*	**250**	340
M18	**89**	*121*	**202**	*275*	**287**	*390*	**346**	470
M20	**126**	*171*	**290**	*390*	**405**	*550*	**486**	660
M22	**169**	*230*	**390**	*530*	**559**	*745*	**656**	890
M24	**217**	*295*	**497**	*375*	**708**	*960*	**840**	1140
M27	**320**	*435*	**733**	*995*	**1032**	*1400*	**1239**	1680
M30	**435**	*590*	**995**	*1350*	**1401**	*1900*	**1681**	2280
M33	**590**	*800*	**1349**	*1830*	**1902**	*2580*	**2278**	3090
M36	**759**	*1030*	**1740**	*2360*	**2441**	*3310*	**2935**	3980
M39	**988**	*1340*	**2249**	*3050*	**3163**	*4290*	**3798**	5150

The guides and ruler furnished below are designed to help you select the appropriate hardware.

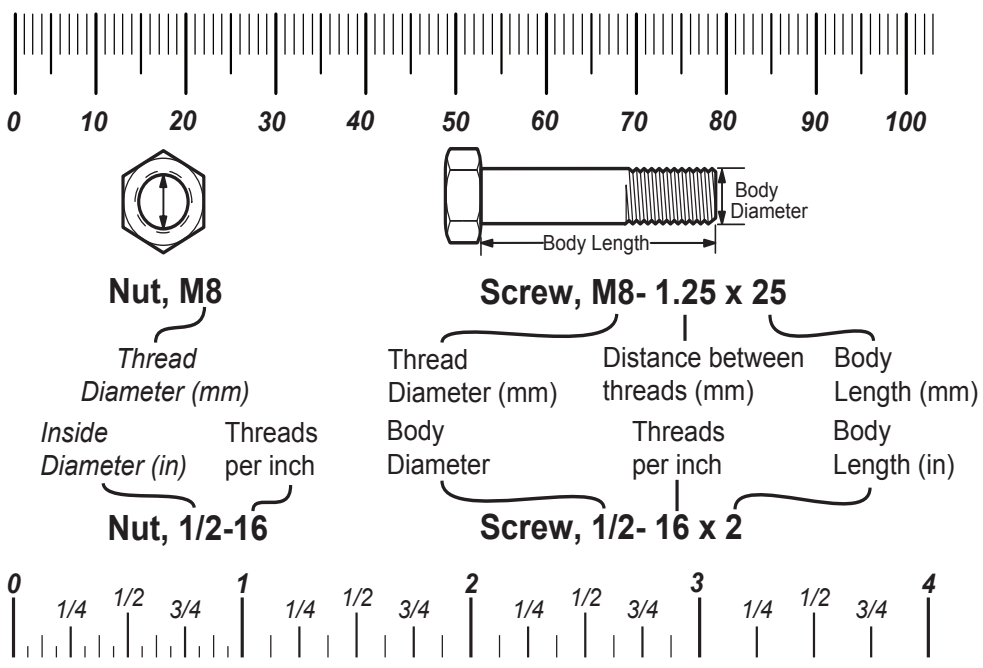

Standard Hardware Sizing

When a washer or nut is identified as **1/2"** (M8), this is the *Nominal size*, meaning the *inside diameter* is 1/2 inch (8mm metric thread diameter); if a second number is present it represents the *threads per inch* (distance between threads).

When bolt or capscrew is identified as **1/2 - 16 x 2"** (M8 - 1.25 x 50), this means the *Nominal size*, or body diameter is 1/2 inch (8mm metric thread diameter), the second number,16, represents the *threads per inch, (distance between threads).* The final number is the body length of the bolt or screw, 2 inches (50mm).

Torque Specification Chart

FOR STANDARD MACHINE HARDWARE (Tolerance ± 20%)

Hardware Grade	No Marks SAE Grade 2		SAE Grade 5		SAE Grade 8	
Size Of Hardware	*in/lbs* **ft/lbs**	Nm.	*in/lbs* **ft/lbs**	Nm.	*in/lbs* **ft/lbs**	Nm.
8-32	*19*	2.1	*30*	3.4	*41*	4.6
8-36	*20*	2.3	*31*	3.5	*43*	4.9
10-24	*27*	3.1	*43*	4.9	*60*	6.8
10-32	*31*	3.5	*49*	5.5	*68*	7.7
1/4-20	*66*	7.6	**8**	10.9	**12**	16.3
1/4-28	*76*	8.6	**10**	13.6	**14**	19.0
5/16-18	**11**	15.0	**17**	23.1	**25**	34.0
5/16-24	**12**	16.3	**19**	25.8	**29**	34.0
3/8-16	**20**	27.2	**30**	40.8	**45**	61.2
3/8-24	**23**	31.3	**35**	47.6	**50**	68.0
7/16-14	**30**	40.8	**50**	68.0	**70**	95.2
7/16-20	**35**	47.6	**55**	74.8	**80**	108.8
1/2-13	**50**	68.0	**75**	102.0	**110**	149.6
1/2-20	**55**	74.8	**90**	122.4	**120**	163.2
9/16-12	**65**	88.4	**110**	149.6	**150**	204.0
9/16-18	**75**	102.0	**120**	163.2	**170**	231.2
5/8-11	**90**	122.4	**150**	204.0	**220**	299.2
5/8-18	**100**	136	**180**	244.8	**240**	326.4
3/4-10	**160**	217.6	**260**	353.6	**386**	525.0
3/4-16	**180**	244.8	**300**	408.0	**420**	571.2
7/8-9	**140**	190.4	**400**	544.0	**600**	816.0
7/8-14	**155**	210.8	**440**	598.4	**660**	897.6
1-8	**220**	299.2	**580**	788.8	**900**	1,244.0
1-12	**240**	326.4	**640**	870.4	**1,000**	1,360.0

NOTES

1. These torque values are to be used for all hardware excluding: locknuts, self-tapping screws, thread forming screws, sheet metal screws and socket head setscrews.
2. Recommended seating torque values for locknuts:
   a. for prevailing torque locknuts - use 65% of grade 5 torques.
   b. for flange whizlock nuts and screws - use 135% of grade 5 torques.
3. Unless otherwise noted on assembly drawings, all torque values must meet this specification.

Common Hardware Types

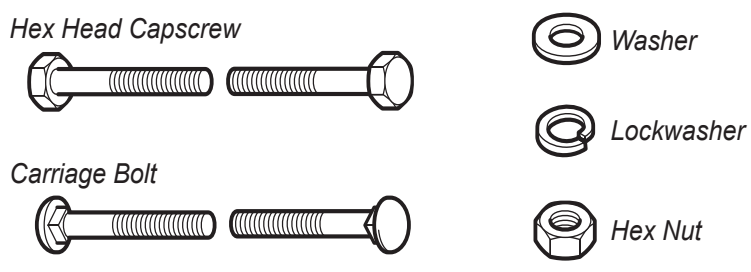

Wrench & Fastener Size Guide

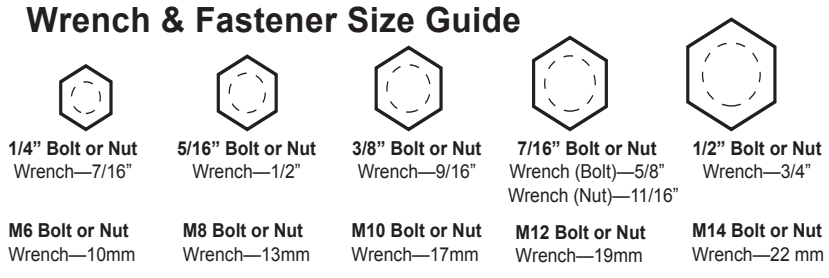

Copyright © Briggs & Stratton. All Rights reserved